نظام قطاعات المطابخ

Kitchen Profiles System

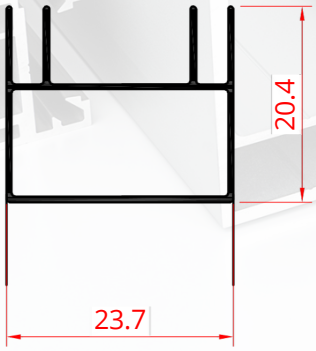

TGN 548

WT: 185 gr/ml

Wall Thickness: 0.65 mm

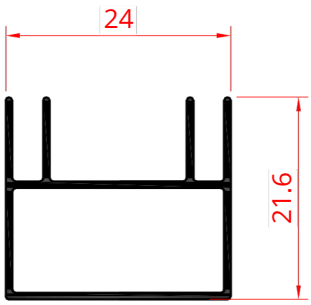

TGN 503

WT: 223 gr/ml

Wall Thickness: 0.75 mm

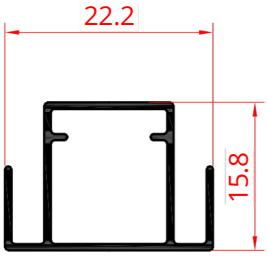

TGN 507

WT: 191 gr/ml

Wall Thickness: 0.80 mm

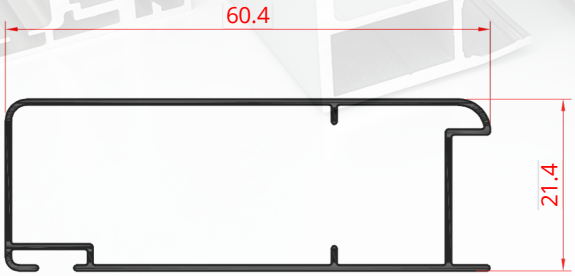

TGN 501

WT: 295 gr/ml
Wall Thickness: 0.70 mm

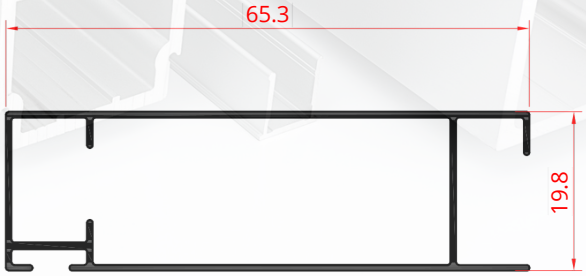

TGN 509

WT: 347 gr/ml
Wall Thickness: 0.70 mm

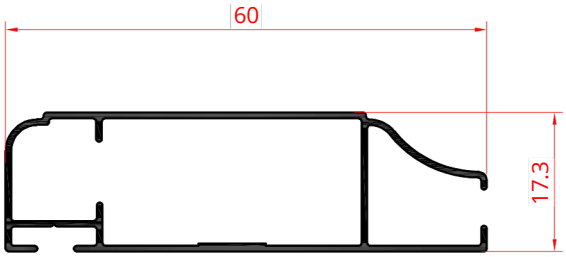

TGN 502

WT: 395 gr/ml
Wall Thickness: 0.84 mm

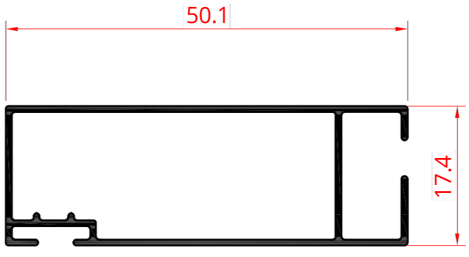

TGN 508

WT: 299 gr/ml
Wall Thickness: 0.75 mm

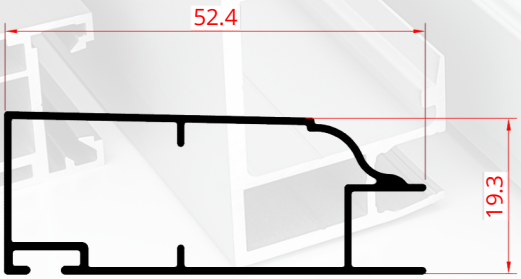

TGN 510

WT: 366 gr/ml

Wall Thickness: 0.80 mm

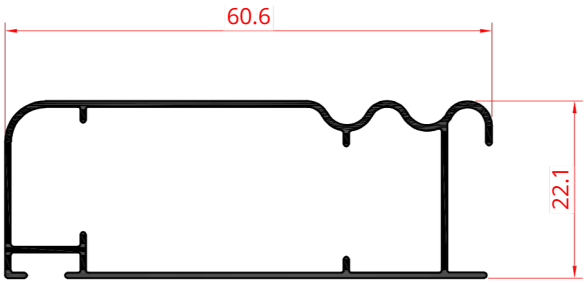

TGN 511

WT: 402 gr/ml

Wall Thickness: 0.80 mm

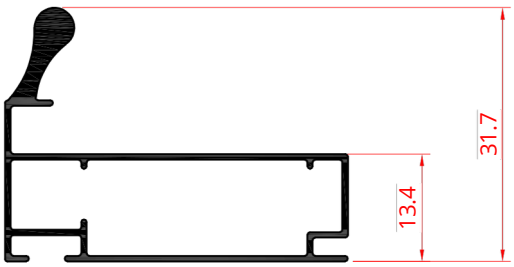

TGN 512

WT: 427 gr/ml

Wall Thickness: 0.80 mm

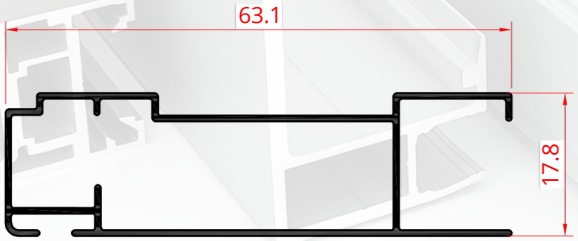

TGN 513

WT: 398 gr/ml

Wall Thickness: 0.80 mm

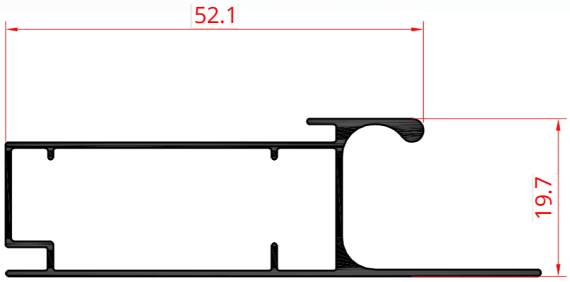

TGN 514

WT: 406 gr/ml

Wall Thickness: 0.75 mm

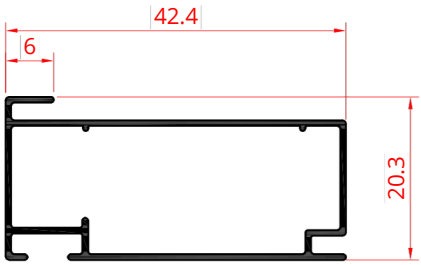

TGN 515

WT: 265 gr/ml

Wall Thickness: 0.70 mm

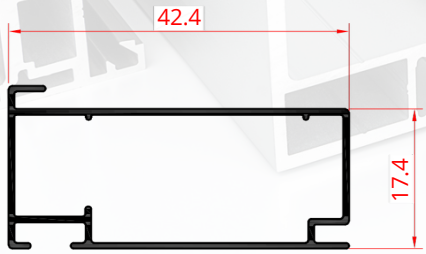

TGN 516

WT: 262 gr/ml
Wall Thickness: 0.75 mm

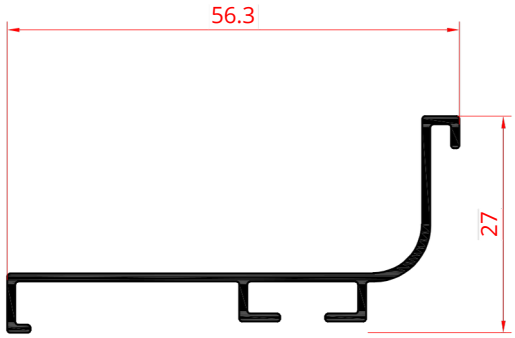

TGN 517

WT: 334 gr/ml
Wall Thickness: 1.2 mm

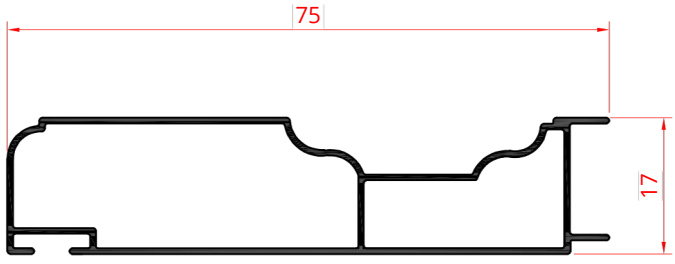

TGN 518

WT: 366 gr/ml
Wall Thickness: 0.70 mm



TGN 519

WT: 480 gr/ml
Wall Thickness: 1.3 mm

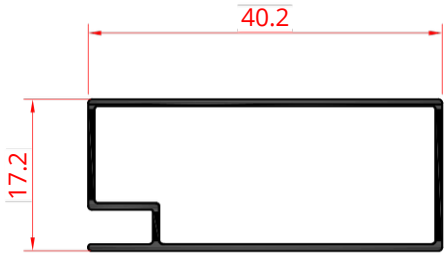

TGN 520

WT: 288 gr/ml
Wall Thickness: 0.90 mm

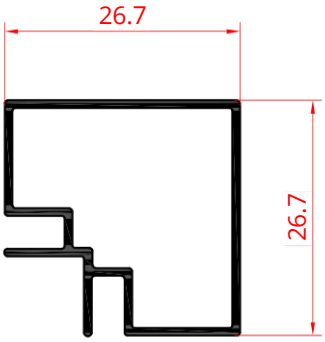

TGN 521

WT: 292 gr/ml
Wall Thickness: 0.95 mm

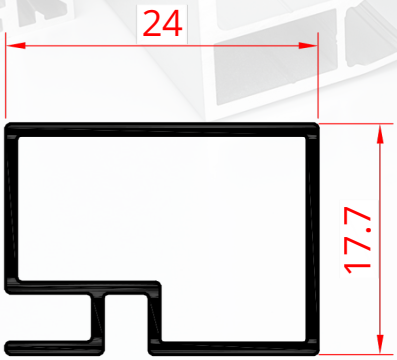

TGN 522

WT: 223 gr/ml
Wall Thickness: 0.95 mm

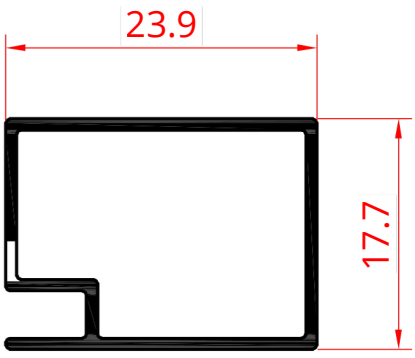

TGN 523

WT: 214 gr/ml
Wall Thickness: 0.95 mm

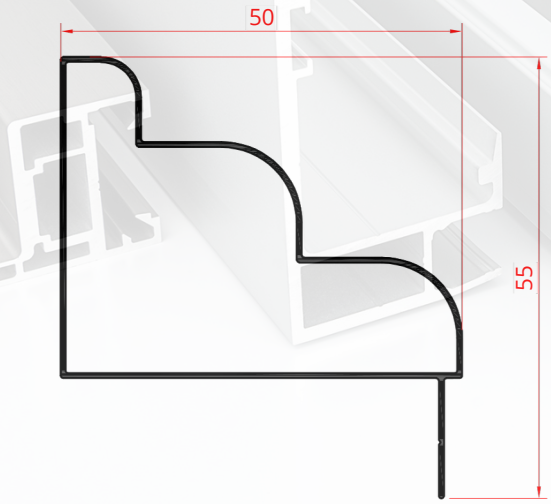

TGN 524

WT: 360 gr/ml
Wall Thickness: 0.7 mm

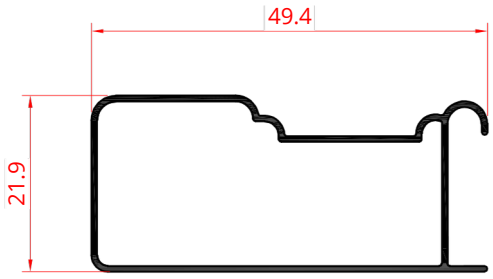

TGN 525

WT: 324 gr/ml
Wall Thickness: 0.8 mm

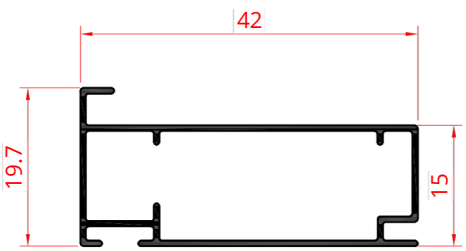

TGN 526

WT: 271 gr/ml
Wall Thickness: 0.7 mm

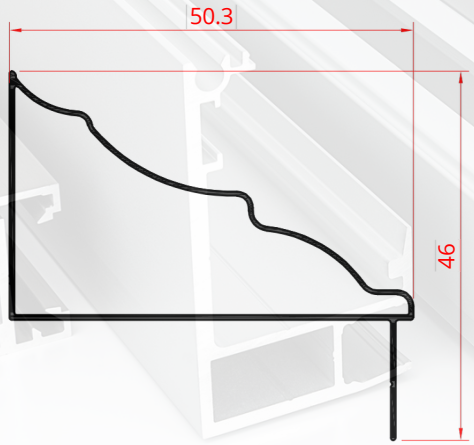

TGN 527

WT: 286 gr/ml
Wall Thickness: 0.7 mm

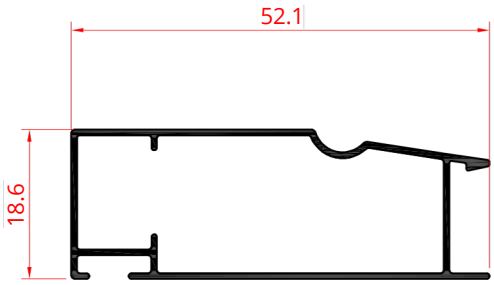

TGN 528

WT: 341 gr/ml
Wall Thickness: 0.8 mm

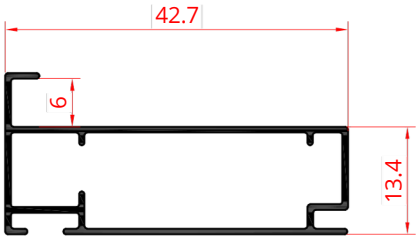

TGN 529

WT: 256 gr/ml
Wall Thickness: 0.8 mm

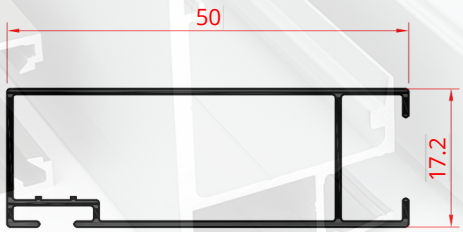

TGN 530

WT: 330 gr/ml
Wall Thickness: 0.8 mm

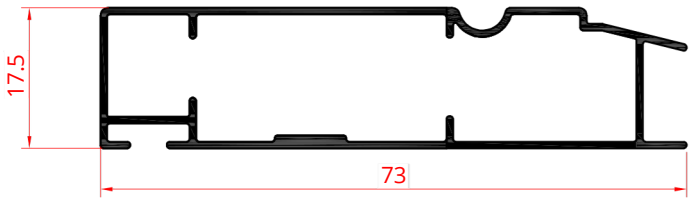

TGN 531

WT: 541 gr/ml
Wall Thickness: 0.95 mm

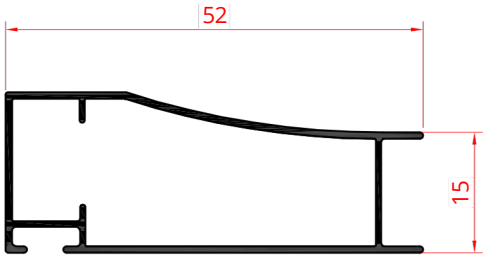

TGN 533

WT: 370 gr/ml
Wall Thickness: 0.95 mm

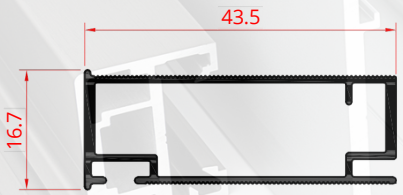

TGN 534

WT: 385 gr/ml
Wall Thickness: 1.7 mm

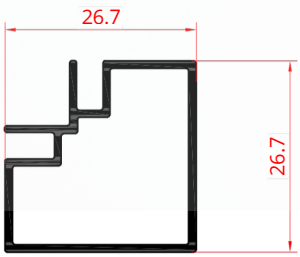

TGN 535

WT: 385 gr/ml
Wall Thickness: 1.2 mm

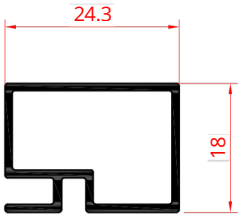

TGN 536

WT: 311 gr/ml
Wall Thickness: 1.2 mm

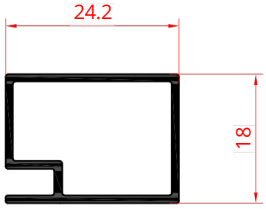

TGN 537

WT: 271 gr/ml
Wall Thickness: 1.2 mm

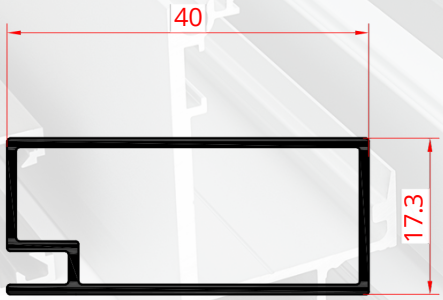

TGN 538

WT: 389 gr/ml
Wall Thickness: 1.2 mm

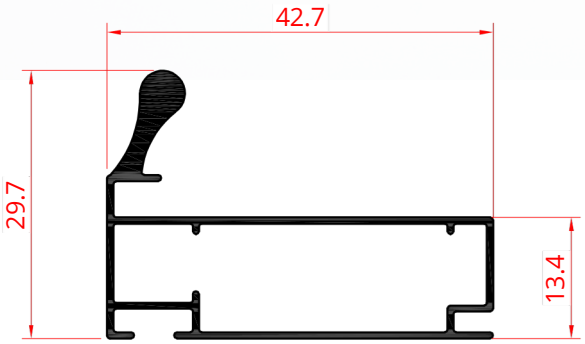

TGN 539

WT: 425 gr/ml
Wall Thickness: 0.8 mm

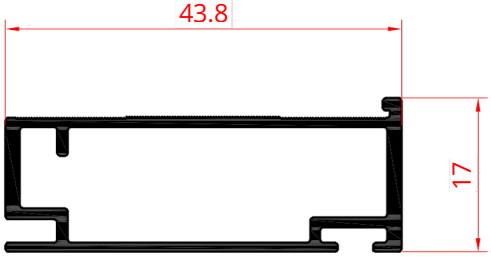

TGN 540

WT: 421 gr/ml
Wall Thickness: 1.7 mm

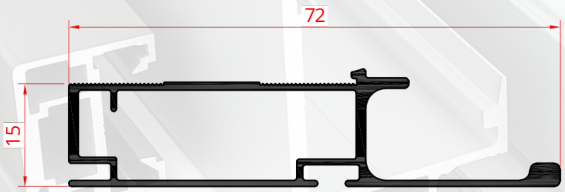

TGN 541

WT: 580 gr/ml
Wall Thickness: 1.7 mm

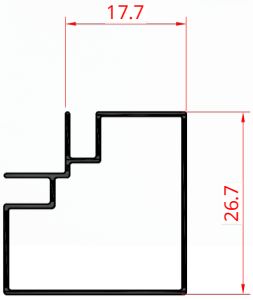

TGN 542

WT: 217 gr/ml
Wall Thickness: 0.7 mm

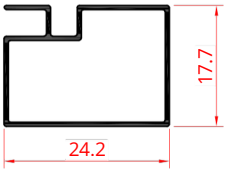

TGN 543

WT: 175 gr/ml
Wall Thickness: 0.7 mm

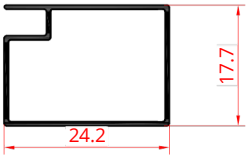

TGN 544

WT: 168 gr/ml
Wall Thickness: 0.7 mm

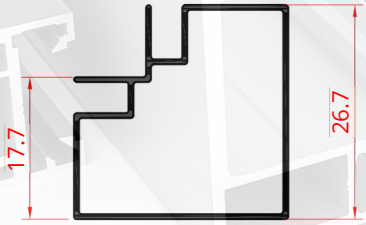

TGN 545

WT: 654 gr/ml
Wall Thickness: 2 mm

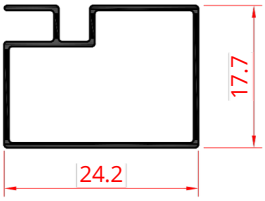

TGN 546

WT: 532 gr/ml
Wall Thickness: 2 mm

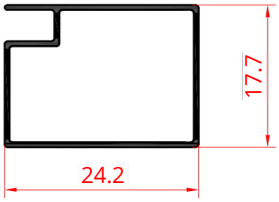

TGN 547

WT: 499 gr/ml
Wall Thickness: 2 mm

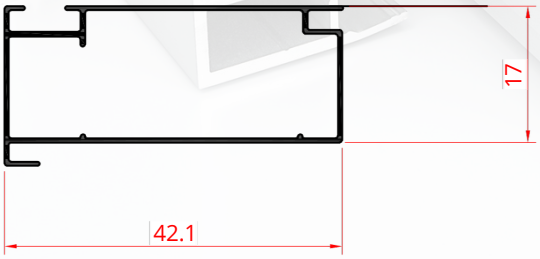

TGN 549
WT: 227 gr/ml
Wall thickness: 0.6 mm

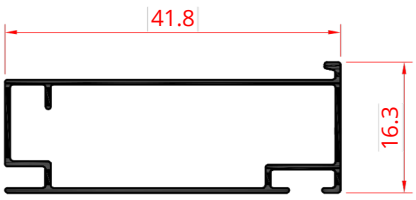

TGN 550
WT: 256 gr/ml
Wall thickness: 0.7 mm

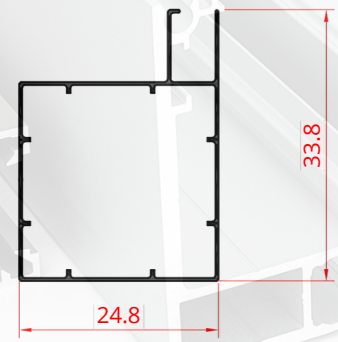

TGN 551
WT: 146 gr/ml
Wall thickness: 0.4 mm

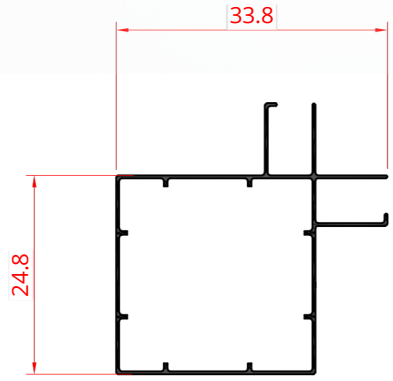

TGN 552
WT: 168 gr/ml
Wall thickness: 0.4 mm

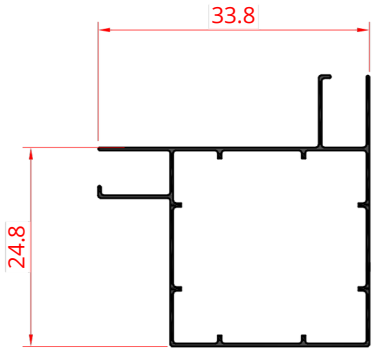

TGN 553
WT: 168 gr/ml
Wall thickness: 0.4 mm

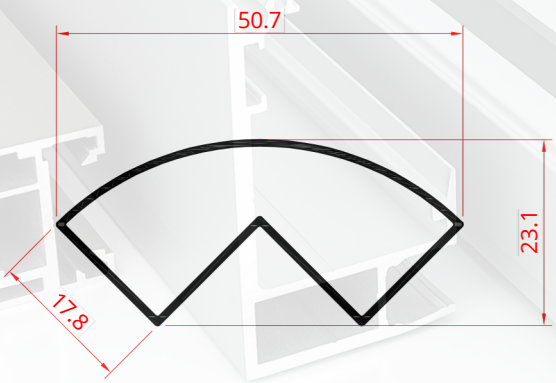

TGN 554

WT: 305 gr/ml
Wall thickness: 0.9 mm

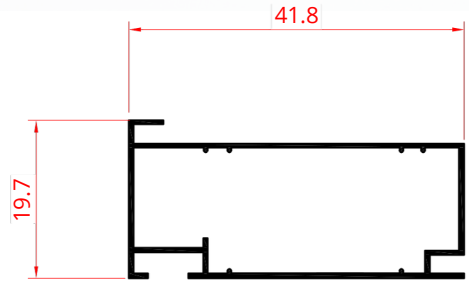

TGN 50016

WT: 256 gr/ml
Wall thickness: 0.7 mm

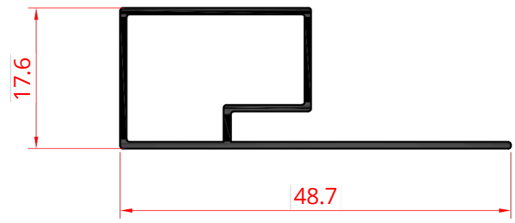

TGN 556

WT: 314 gr/ml
Wall thickness: 1 mm

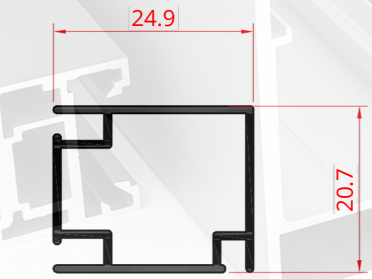

TGN 557

WT: 295 gr/ml
Wall thickness:1.1 mm

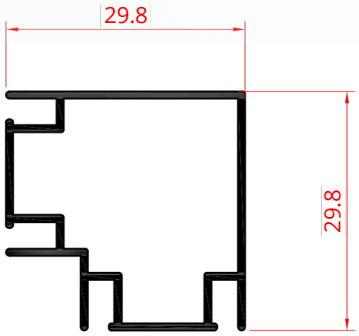

TGN 558

WT: 400 gr/ml
Wall thickness: 1.1 mm

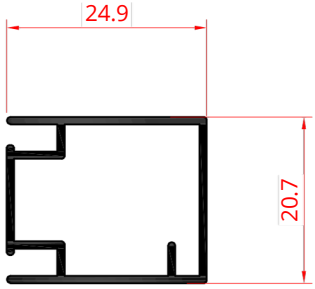

TGN 559

WT: 295 gr/ml
Wall thickness: 1.1 mm

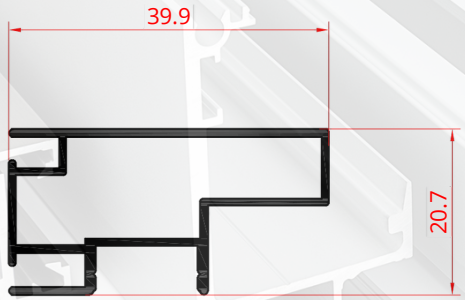

TGN 560

WT: 403 gr/ml
Wall thickness: 1.2 mm

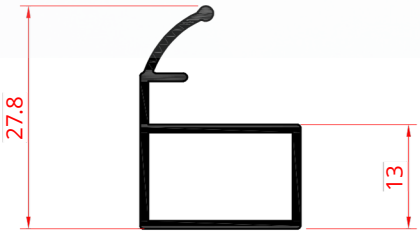

TGN 561

WT: 266 gr/ml
Wall thickness: 1.4 mm

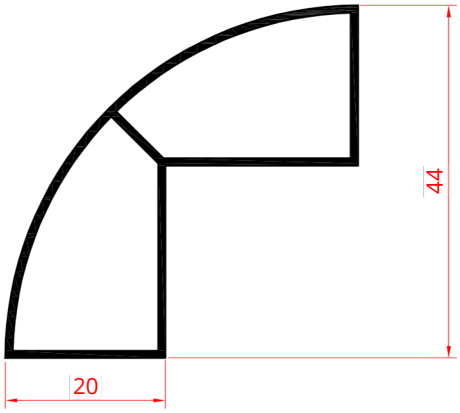

TGN 562

WT: 453 gr/ml
Wall thickness: 1.1 mm

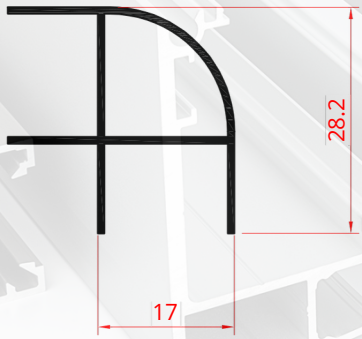

TGN 563

WT: 257 gr/ml
Wall thickness: 0.9 mm

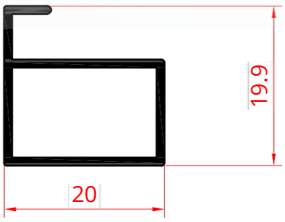

TGN 564

WT: 230 gr/ml
Wall thickness: 1.3 mm

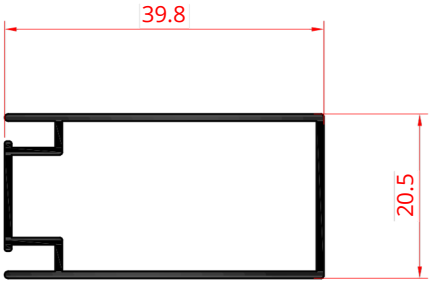

TGN 565

WT: 383 gr/ml
Wall thickness: 1.2 mm

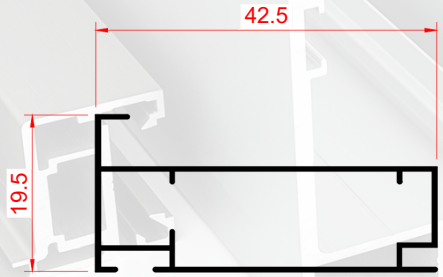

TGN 566
WT: 208gr/ml
Wall thickness: 0.65mm

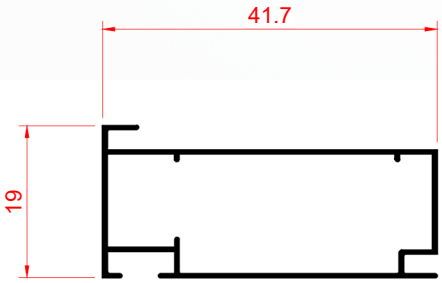

TGN 569
WT: 208gr/ml
Wall thickness: 0.65mm

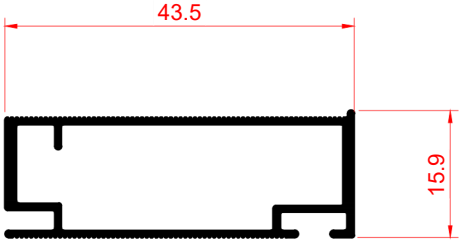

TGN 555
WT: 383gr/ml
Wall thickness: 1.65mm

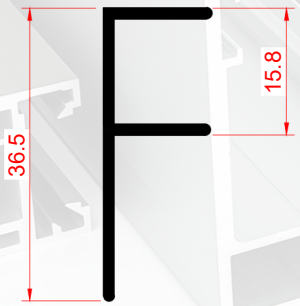

TGN 618
WT: 244gr/ml
Wall thickness: 1.4mm

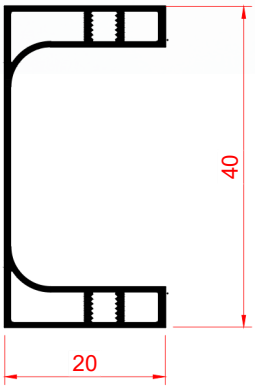

TGN 567
WT: 295gr/ml
Wall thickness: 0.8mm

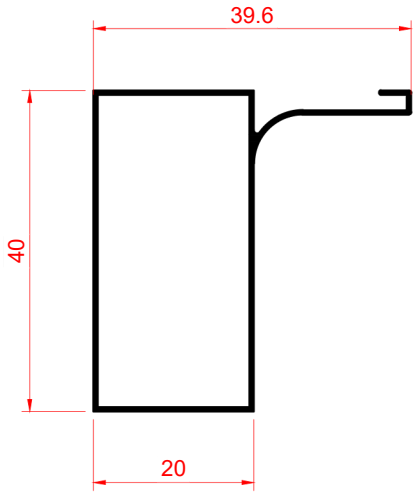

TGN 568
WT: 259gr/ml
Wall thickness: 0.65mm

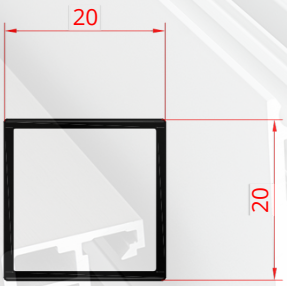

TGN 600

WT: 246 gr/ml
Wall thickness: 1.2 mm

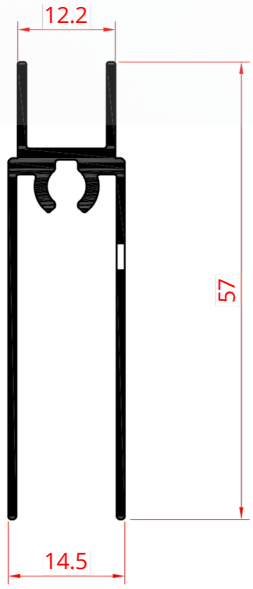

TGN 605

WT: 528 gr/ml
Wall thickness: 1.2 mm

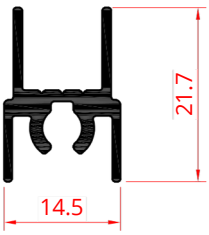

TGN 606

WT: 298 gr/ml
Wall thickness: 1.2 mm

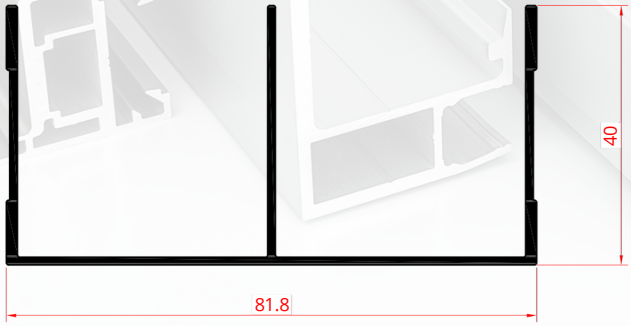

TGN 607

WT: 829 gr/ml
Wall thickness: 1.4 mm



TGN 608

WT: 467 gr/ml
Wall thickness: 1.4 mm

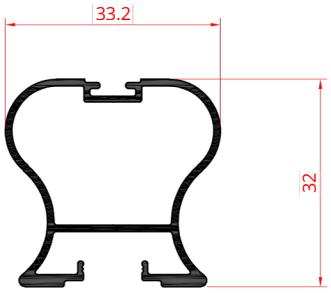

TGN 609

WT: 486 gr/ml
Wall thickness: 1.2 mm

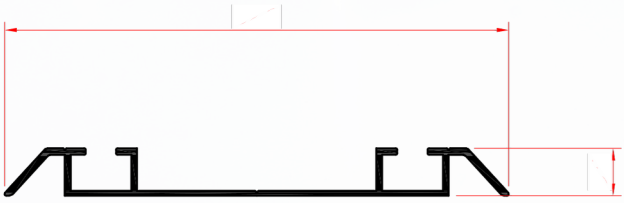

TGN 610

WT: 202 gr/ml
Wall thickness: 0.7 mm

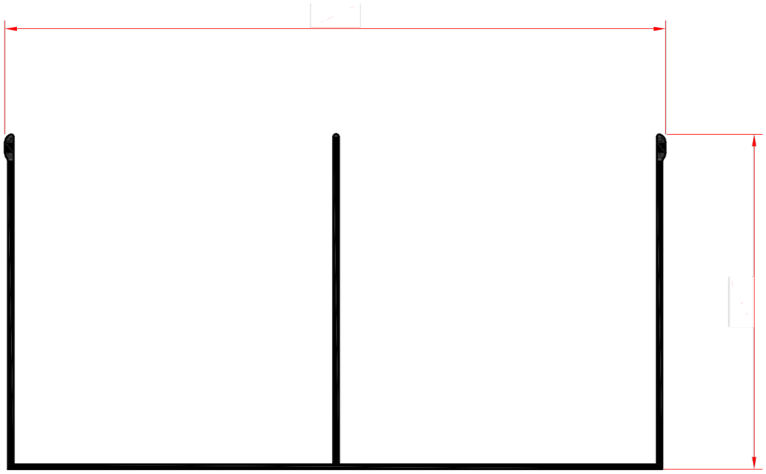

TGN 611

WT: 422 gr/ml
Wall thickness: 0.8 mm

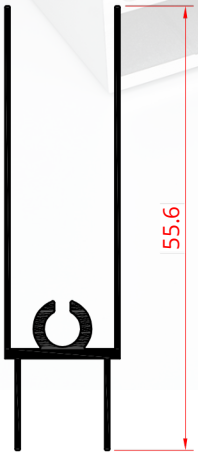

TGN 612

WT: 310 gr/ml
Wall thickness: 0.7 mm

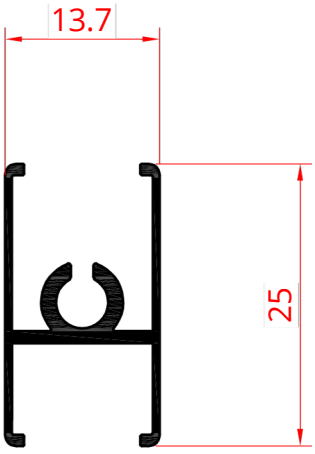

TGN 613

WT: 191 gr/ml
Wall thickness: 0.7 mm

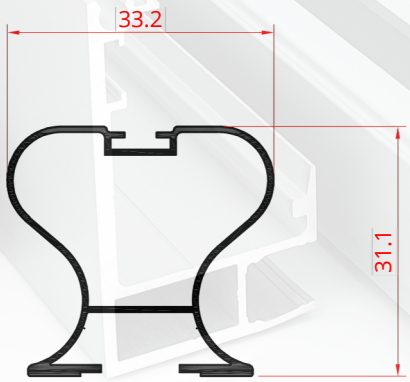

TGN 615

WT: 324 gr/ml
Wall thickness: 0.7 mm

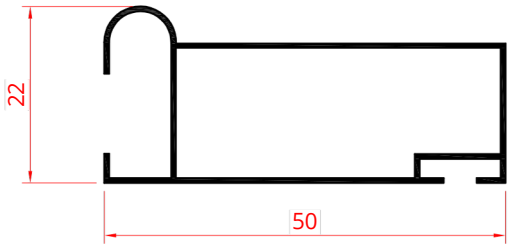

TGN 616

WT: 288 gr/ml
Wall thickness: 0.7 mm

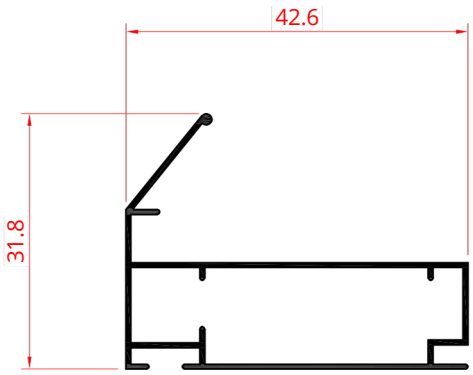

TGN 617

WT: 284 gr/ml
Wall thickness: 0.7 mm